LEADER FOX

Electric Bicycle Operating Instructions

Under the law, the dealer is obliged to attach the LEADER FOX Electric Bicycle Operating Instructions to every product

E – BIKE POWER RIDE

Denver

Exeter

Introduction

Dear users,

Please read carefully all the information regarding your E-LF product to ensure optimal functioning of your e-bike. The following text containing a comprehensive description will provide you with information on all aspects and details (including installation, setting up and general use of the display) regarding the use of our display. This instruction document will also help you solve potential problems and failures.

What is an electric bicycle?

Electric bicycle is a conventional bicycle with an electric drive added to assist the rider. The motor function is actuated by pedalling, which is scanned by a special sensor installed in the pedal hub. Therefore, you have to keep pedalling on an e-bike, the motor is there only to help you. You can set an electric bicycle in motion also using a control button or an accelerator but only up to the maximum permitted speed of 6 KMPH (e.g. for walk assistance). The maximum speed of an e-bike with motor assistance is 25 KMPH, with a 10% tolerance (when this speed limit is reached, the motor switches off and you need to pedal just like with a regular bicycle). When your battery runs out of power or your motor is off, you can ride your electric bicycle as a conventional bike, without any resistance at all.

From the point of view of the Road Traffic Act, an electric bicycle whose features conform to European standard EN 15194-1 is regarded as a regular bicycle, i.e. you can ride on bike trails, do not need a driver's license and a helmet is mandatory only up to 18 years of age.

Description

Factors influencing the electric bicycle range

1. Rolling resistance of the tyres. Leader Fox e-bikes are fittet with tyres with low rolling resistance and increased resistance to puncture. It is also important that the tyres are inflated properly. Therefor, if the tyres of your electric bicycle are underinflated, the range will decrease.
2. Weight of the electric bicycle. The lower weight of the electric bicycle, the greater the range.
3. Battery status. It depends on whether the battery was fully charged before your trip. It is also to be expected that the higher the number of discharge cycles the battery has undergone, the smaller capacity it has.
4. Profile and surface of the track. The higher the elevation difference and the steeper hills you negotiate and the worse surface, the shorter the range.
5. Riding mode. It depends on which of the three riding modes you have set.
6. Continuity of riding. The more braking and acceleration, the shorter the range.
7. Air resistance. For example, it depends on whether we ride a bicycle with low frame and sitting upright or whether we ride sporty bicycle with seat set to the same height as the handlebars.
8. Wind strength. The stronger the wind we have beck, the longer the range and vice versa.
9. Weight of the rider and load. The greater the weight, the shorter the range.
10. External temperature. The lower the temperature, the less battery capacity can be used while riding.

Electric set

Modest
The system uses monitoring of torque, monitoring of speed of the pedal assist system and monitoring of real speed of wheels.
The system uses a dual protection feedback for measuring the speed signal to ensure safety and reliabilityof the system.
Speed sensor is used for a more comfortable and smoother ride, with less effort on the rider
It is highly efficient with low power consumption, long range, low noise levels, and smooth operation.

Description and scope of operation:

The motor unit works properly under the following operating conditions:
Temperature range -20 + 55°C
Relative humidity -15 -95% RH
Maximum torque -≥ 80
Weight -3.6Kg
Noise - <55 dB
Dustproof/ waterproof -IP65
Certified -CE / EN14764/ ROHS
Front and rear light -DC 400mA/6V

Description of the power unit is placed on the cover and shows the following information:

For example – MM G360.250 17 023 F7 Q817 0001

MM G360 – name of motor unit
250 – rated motor power
17 – stator turns
023 – connection combination sort
F7 – measurement and control equipment number
Q817 – production date 17th August 2016
0001 – production seriál number, ranging 0000 to 9999

Dimensions of the power unit:

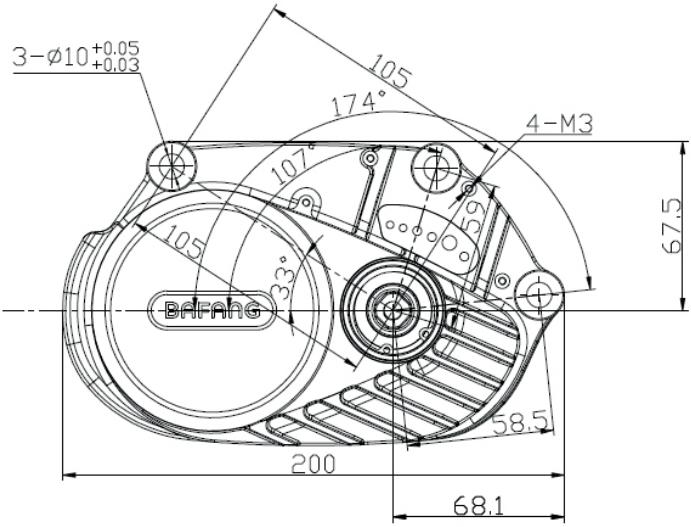

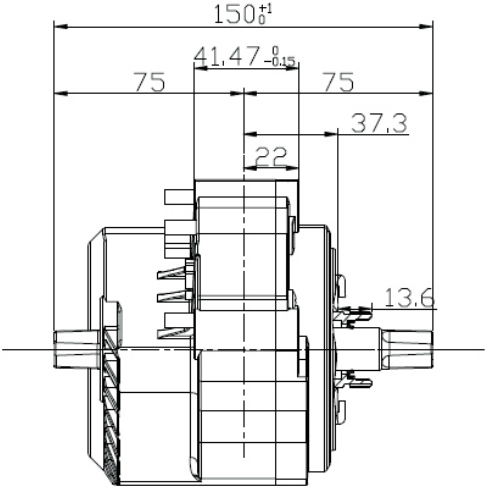

Safety instruction

Battery:

Do not throw the battery into fire.
Do not throw the battery into water.
Do not use the battery for other appliances. It has been made specifically for this model.
Do not dismantle or modify the battery.
Do not connect the positive and negative poles of the battery.

Charger:

Do not dismantle or modify the charger.
Do not use the charger for other appliances. It has been made specifically for this model.
Do not throw the charger into fire or water.
Do not touch the charger with wet hands.
Keep the charger from animals or children.
Do not cover the charger.
Do not use the charger if it is broken

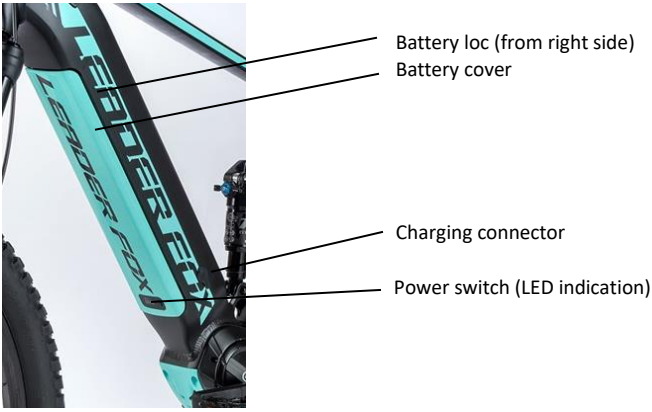

Charging set

Battery

Battery charging and maintenance:

Charge the battery in a dry enviroment to avoid short-circuit damage.
Charge the battery to at least 60% of the capacity once every 3 months even when the bicycle is not used.
Do not cover the battery or the charger.
Do not leave the battery constantly connected to the power source.
Do not use the battery for other appliances. It has been made specifically for this model.
Do not disassemble or modify the battery pack.
Do not throw the battery into fire or expose it to extreme temperatures.
Recharging time from zero to 100% is 1-7 hours.

Drive warranty:

The warranty applies to those drive parts that are not sensitive to improper handling (pack, electronics, charger, etc.); such parts are covered by a 24-month warranty.
The warranty does not apply to chemical parts of the battery and to capacity reduction due to normal use (39% after the expiry of two years); those parts are covered by a 12-month warranty.

Charging:

The battery is the most expensive part of an electric bicycle; therefore, pay increased attention during handling, charging and storage. The battery is sensitive to precise charging. Therefore, it is necessary to charge Li-Ion rechargeable batteries using only a charger supplied by us. Connect the charger to 220-240 V power outlet. 5A protected circuit is sufficient. The charger will automatically suspend charging when full capacity of all cells is reached.

We recommend discharging the battery in full after each ride to ensure that your battery will be up to its full capacity for your next ride. Charging the battery may last 1 to 5 hours depending on the condition of the battery cells. Charge it exclusively in covered dry areas (moisture and dripping water can damage the charger) at a temperature of 5 to 40°C.

The charging process is indicated by a red glowing LED. It will turn green when the battery is charged and the charging process is complete. The battery contains a charge-monitoring indicator (when the charge indicator button is pressed, the light indicator will come on). Always switch off the battery when finished riding the bike.

Normal battery behaviour:

If the motor stops running smoothly and switches to intermittent operation, it could be a sign of low battery capacity. In that case switch off the electric drive system and continue without motor assistance, as if riding a conventional bicycle.

Battery warming is normal and does not indicate any defect. The battery is protected by a temperature sensor and switches off automatically in case of excessive overheating. Wait until the battery cools down to its normal operating temperature and then ride on.

If you feel your total battery capacity has dropped, it could be caused by charging or operation in suboptimal climatic conditions. Carry out 3 full charging cycles. Fully discharge the battery while riding and then charge to its full capacity at room temperature.

If the charge indicator shows that the battery is discharged, there is still a minimum voltage level in it which protects it against damage but is not enough to power the electric bicycle. Recharge the battery as soon as possible. Never leave the battery fully discharged, it could results in its damage.

In the case, that the battery will be turned on more than 30 min and bike will not be used, the battery will be automatically switched off.

Proper care of the battery prolongs its life.

LCD display

Product:
Intelligent display DP C240.CAN

Supplier:
Bafang

Electrical parameters:

Battery supply 36V
Rated operating current 40mA
Off leakage current < 1 uA
CAN BUS protocol
Maxoutput current 100mA
Operating temperature – 20 ~ 70 °C
Storage temperature – 30 ~ 80 °C
USB port 5V 500mA

LCD dimensions and materials:

Prodcut shell is ABS, transparent window is made withhigh strength Acrylic.
Can be used up to -20°C.
CE / IP65 water proof / ROHS.

LCD Display description:

Speed indication: Includes maximum speed, average speed.

Unit switch between imperial and metric.

Intelligent battery capacity indication.

Control and indication for the headlight.

5 levels of backlight brightness setting.

Indication for power assistance level with 6 levels: 0/1/2/3/4/5.

Indication for trip: To indicate single-trip distance, total distance and remaining distance.

Multiple data indication: Indication for the remaining distance, Indication for the consumption of energy

Record and indication for the error information.

Control and indication for push assistance.

USB charging port.

Maximal range:

Maximal range is set with fully charge battery and flat terrain and little bit of headwind. Average range is calculated with ideal set of the assist and slightly hilly terrain.

Controller

Controller description:

Assembly instructions

Display assembly:

Please pay attention to the tightening torque of screws. Damage caused by excessive tightening torque or incorrect assembly / disassembly is not covered by warranty.

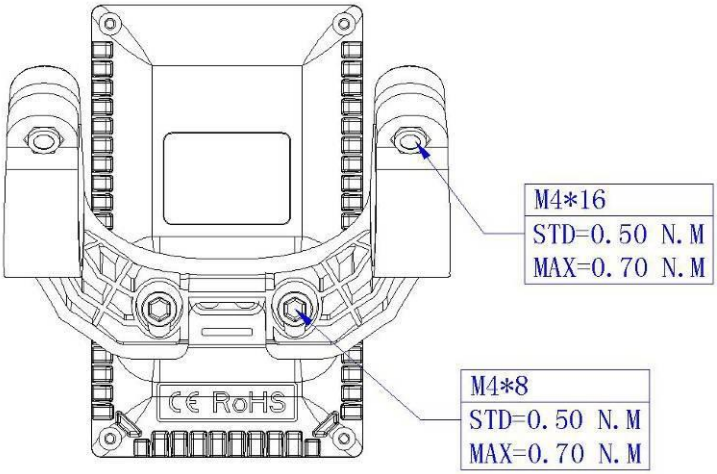

Control

Turning on the electrical system of the e-bike

Before switch on of the system please check electrical wiring.

Switch on power of the electrical system on battery, colored backlighting illuminates.

Switch on display with press and short hold (1,5 second) ”ON/OFF” button. Display will automatically turns off if it is not used for a while.

After ride turns off e-bike in the same way.

For better gear change is appropriately stop pedaling for a while.

Before ride please lock battery in frame **and take out the keys.**

Assist level operating

Short press UP/DOWN buttonc can change the assist level. Top assist level is 5, 0 for neutral.

Walking mode

Press and hold DOWN button for 2 second can get into walking mode, out of the mode when release the button.

Walk assistance speed depends on gear ratio. Lower gear ratio / slower speed, higher gear ratio/ faster speed.

Battery indication

Shows approximate value of battery capacity at display. Accurate values show indicator on battery indicator.

Speed and mileage mode switch

Short press POWER button can change the speed and mileage mode

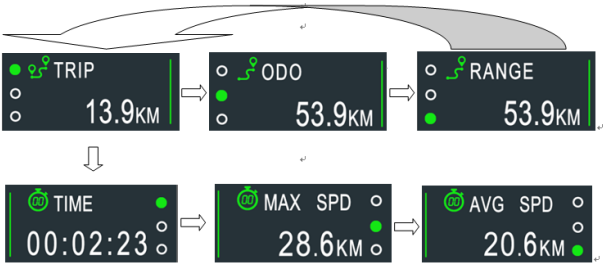

Headlight/Backlight On/Off

Press and hold UP button for 1 second can turn on/off the headlight and the screen will switch to the corresponding mode.

The motor does not work when battery voltage is low. Display still can keep the headlight on for a while when e-bike is in riding.

Data cleanup

Press and hold UP and DOWN button together for 1 second can reset several temporary data, temporary data include AVG speed/MAX speed/Trip/Time.

Parameter setting

By double press POWER button (interval less than 0,3 second) can get into setting menus.

Press UP/DOWN buttons to change the parameter setting, press POWER button toswitch to next item.

Double press POWER button will exit from menu.

Display will automatically quit menu when there is no operation for 30 seconds.

For safety reasons, you can not enter the settings menu while riding.

Language

Press UP/DOWN button to switch between languages.

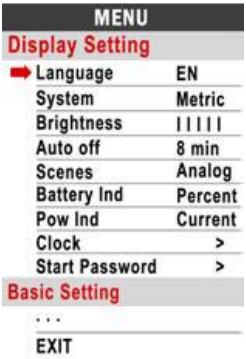

System (Km/mile)

Press UP/DOWN button to switch between Metric/Imperial.

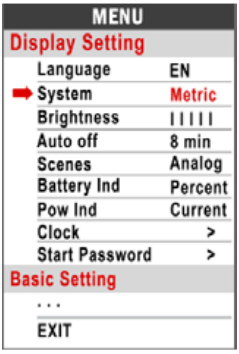

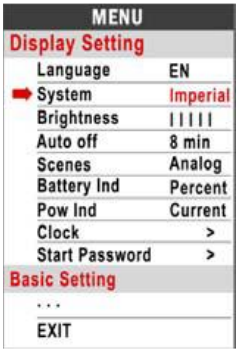

Brightness

Press UP/DOWN button to change the brightness of the backlight, I is darkness, IIIII is brightness.

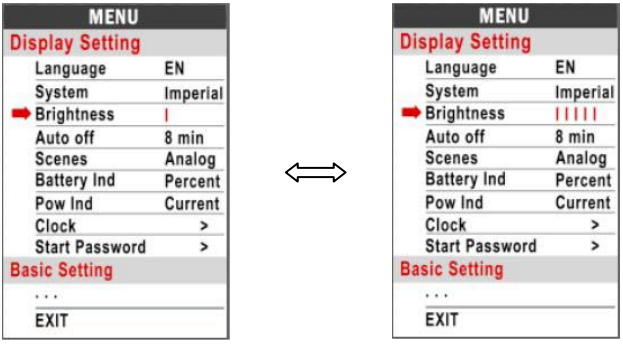

Auto Off

Press UP/DOWN button to change the auto power off time, from 1 to 9 the number represent time (minutes) to shutdown, default value is 5 minutes.

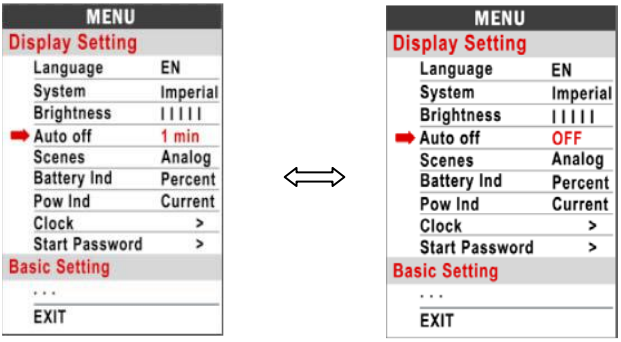

Scene

Press UP/DOWN button to change the scenes, Digital/Analog.

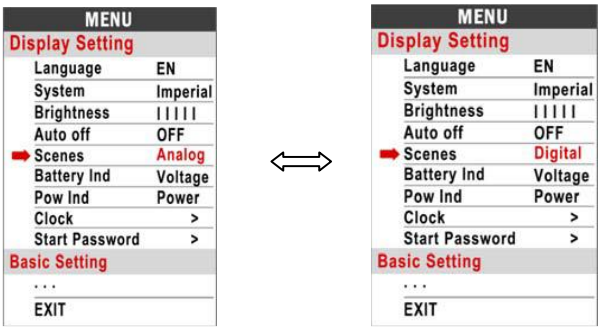

Battery Ind

Press UP/DOWN button to change the battery indicator Voltage/Percentage/Off (napětí/kapacita v procentech/vypnuto).

Power indicator

Press UP/DOWN button to change the scenes, Digital/Analog.

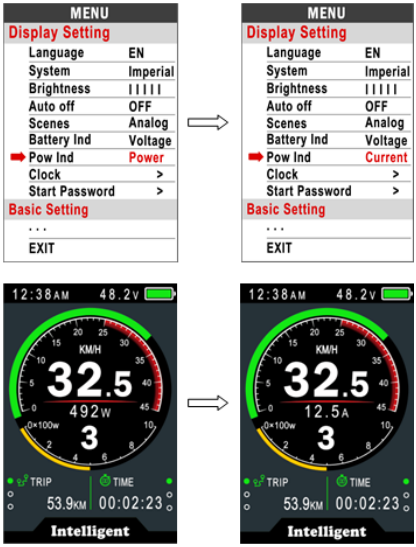

Clock

Clock setting, press POWER button get into the clock setting menu, press UP/DOWN button to set Year/Month/Day/Hour/Min/Sec.

Clock – show / hide

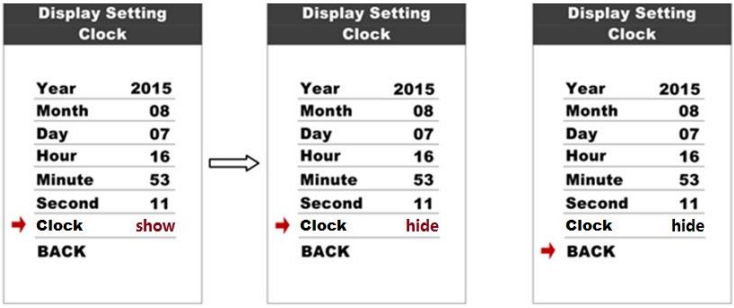

Start password

Press POWER button get into the password setting. If you set Start input ON you will have to set right password every time you turn on the display. Please be careful with your password, if you forget it you will not be able to switch on the bike.

Basic setting:

System is factory set. For changing these parameters contact your dealer or producer.
Do not change these parameters by yourself, you can damage the e-bike.

Damaged caused by improper treatment is not within the scope of the warranty.

Maintenance

Regular maintenance:

- maintain all components of the electric bicycle clean

- use only the recommended and tested cleaning materials

- regularly lubricate the chain with suitable oils

- in winter, clean the electric bicycle after each ride and pay increased attention to removing salt from battery contacts and other connectors

- while handling the electric bicycle, make sure the cables of the electric system are not damaged. Damaged cables pose a risk of electricshock

- regularly check all connections for correct tightening and brakes for correct function. Check also individual parts of the electric bicycle for damage. For example: cracks on the frame, fork, handlebars, stem, damage to cables, damage to battery pack, etc.

Battery transport:

Battery transport is subject to the requirements of regulations on dangerous goods. Private users may transport undamaged batteries on roads without having to conform to other conditions.

In case of transport by commercial users or by third parties it is necessary to comply with special packaging and marking requirements (e.g. ADR regulations)

Batteries should only be sent if the battery pack is undamaged. Plug loose contacts and pack the battery to prevent its movement in the packaging. Notify the forwarding service that the transport concerns dangerous goods.

Battery storage:

Store the battery in a dry and well-ventilated place, out of reach of direct sunlight and other heat sources. In case of cold storage it is necessary to let the battery warm up to normal room temperature (20°C) before putting into operation.

Never leave the battery fully discharged. It could result in its permanentdamage. For long-term storage keep the battery fully charged. However, do not store it while permanently connected to the charger or installed in the electric bicycle.

Li-Ion batteries are fully recyclable. After expiry of the battery life you can returnit at any collection point or your dealer.

If you use an e-bike in hard conditions (long-term use of the maximum assistance), for longer ride at higher temperatures (30 ° C or above), in direct sunlight or when the battery is partially discharged and a combination of these situations is it possible that bike will automaticly swith off. This is a fuse protecting the control unit against burning. We recommend stop the ride and let the bike (control unit) cool down little bit. This is not a defect.

Possible problems and their solutions

In case of system failure perform its diagnostics or contact your dealer.

The control LCD display is not on:

- always make sure the battery is charged
- check whether the battery is inserted correctly, whether the battery switch is on
- check the connections of the control unit and the display

The motor does not start when the walk assistance button is pressed

- check the connection of the motor cable (at the motor and the control unit)
- check the connections of the control unit and the display

The motor does not start when rotating the pedal cranks (pedalling)

- check the connection of the pedalling sensor to the control unit
- check the distance between the pedalling sensor and the magnet disk (max. 4 mm)
- check whether the disk is firmly attached to the central axle and does not spin freely
- in case of use of compact-type pedalling sensor

Warning

When there is a problem with the electric bicycle, it can show error messages. LCD display will show the icon and an error code will be displayed on the speed display. Error codes are marked from 01 E~FF E; see their meaning in the table below.

Error code	Description	Solution
6	Low battery voltage	Check battery voltage
7	High voltage protection	Check battery voltage
8	Hall probe error	Check motor
9	Three-phase supply error	Check motor
10	Controller over temperatue	Stop riding for a while
11	Overheating controller senzor	Check controller
12	Overvoltage controller senzor	Check controller
13	Overheated battery	Chcek battery
14	Motor‘ temperature error	Stop riding for a while
15	Controller‘s overheated	Stop riding for a while
21	Speed senzor error	Check the position of the senzor
22	BMS communication error	Change battery
25	Torque error	Check motor
30	Communication error	Check connectors

Electric set warranty

Complaint procedure:

Submit any complaints concerning the electric set or the battery to your dealer.

When filing a complaint, submit a proof of purchase and a warranty certificate with the registered serial number of the battery and indicate the reason for the complaint and a description of the defect.

Wrranty conditions:

24 months for electric bicycle components – applies to manufacturing and material defects beyond normal wear and tear caused by use.

12 months for battery life – the nominal battery capacity does not drop below 70% of the total capacity over 12 months from the sale of the electric bicycle.

Warranty conditions:

The electric set must be used exclusively for the purposes it is intended for.

The electric set must be used, stored and maintained in accordance with these Operating Instructions.

A warranty claim shall expire:

If it is found out that the damage to the product is due to the user's fault (accident, inexpert handling beyond the framework of these Operating Instructions, tampering with the structure of the electric bicycle or connection of the electric system, improper storage, etc.).

Expiry of the warranty period.

The warranty only applies to the first owner

Warning

If you do not understand any of the points in these Operating Instructions, please contact the dealer for explanation. Please read the whole manual!

Do not lend the e-bike to persons not briefed in its use and operation. Complaints resulting from improper handling will not be accepted.

The LF Energy electric bicycle is not intended for use by children under 15 years of age. Likewise, the electric bicycle cannot be used by persons unable to pedal or handle it independently. The manufacturer is not to be held responsible for any potential injuries or damage to the bicycle!

Ideal weather conditions for using an electric bicycle are dry days, when the outdoor temperature is above 10°C. When used at lower temperatures, the battery discharges faster due to physical phenomena. Using the electric bicycle at temperatures below 0°C is not recommended.

Do not expose the bicycle to direct sunlight as it is fitted with a protective temperature sensor for the electric motor.

Never submerge the battery, the charger and other electric components in water or another liquid.

Never wash the electric bicycle in a pressure washer (WAP) and always remove the battery before washing

It is forbidden to tamper with the connections of the electric motor, the control unit and the battery. Violating this section may result in the warranty not being acknowledged or in irreversible damage to the electric bicycle.

DO NOT USE chargers and components other than the ones included with the electric bicycle.

We cannot be held responsible for damage caused by use of other non-approved goods

bohemiabike

bikefactory

Na Pankráci 1724, 140 00 Praha 4 - Pankrác, IČ: 63910756

EU PROHLÁŠENÍ O SHODĚ

Prohlašujeme,že elektrokola značky Leader fox, dodávané na český i zahraniční trh společností Bohemia bike a.s. jsou v souladu s platnými českými technickými normami ČSN EN ISO 4210-2 i ustanovením evropských směrnic EN 15194:2017, 2006/42/EC A 2014/30/EU pro jízdní kola s pomocným elektrickým motorem tzv. EPAC.
Výrobky jsou v souladu se směrnicí na strojní zařízení 2006/42/ES (NV 176/2008 Sb.)
Tato vyrobená strojní zařízení splňují všechna příslušná ustanovení předmětného předpisu EU.

Seznam výrobků obsahuje příloha dokumentu:

V Českých Budějovicích 1. ledna 2020

bohemia bike a.s.
IČ: 63910756, DIČ: CZ63910756
Na Pankráci 1724, 140 00 Praha 4 - Pankrác
CZECH REPUBLIC (8)

.....

Pavel Müller, předseda představenstva a odpovědná osoba za veškerou tech. dokumentaci

Enjoy many pleasant and safe kilometres on your new electric bicycle.

Your Leader Fox Team

Czech brand of electric bicycles.
BOHEMIA BIKE

Address
Na Pankráci 1724
14000 Praha 4 - Pankrác

Development, design and manufacturing
Okružní 697
České Budějovice 37001

Phone: 388 314 885
Email: info@leaderfox.cz