FACTOR 26" 14"
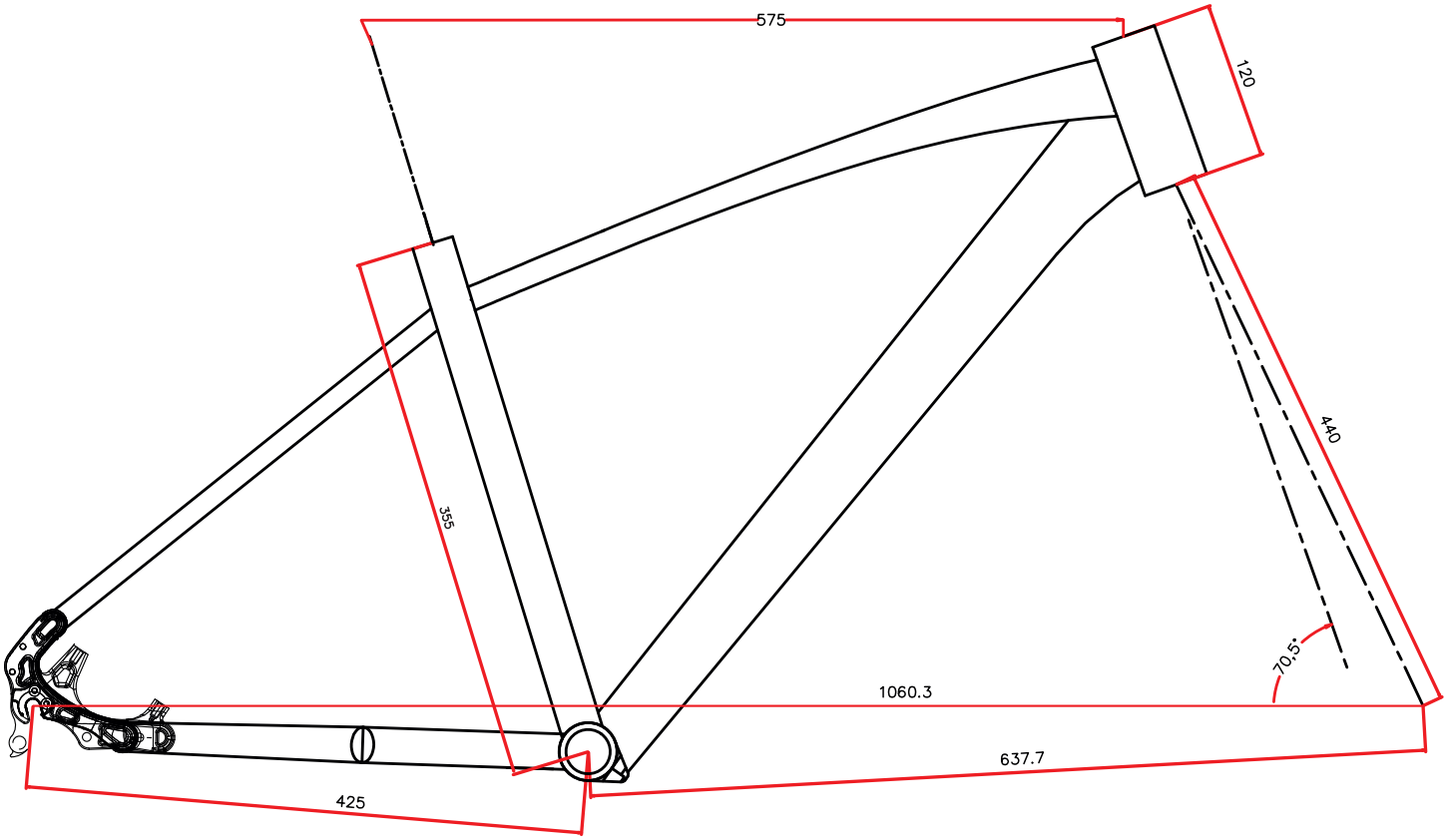
LEADER FOX