EXETER GENT 19"
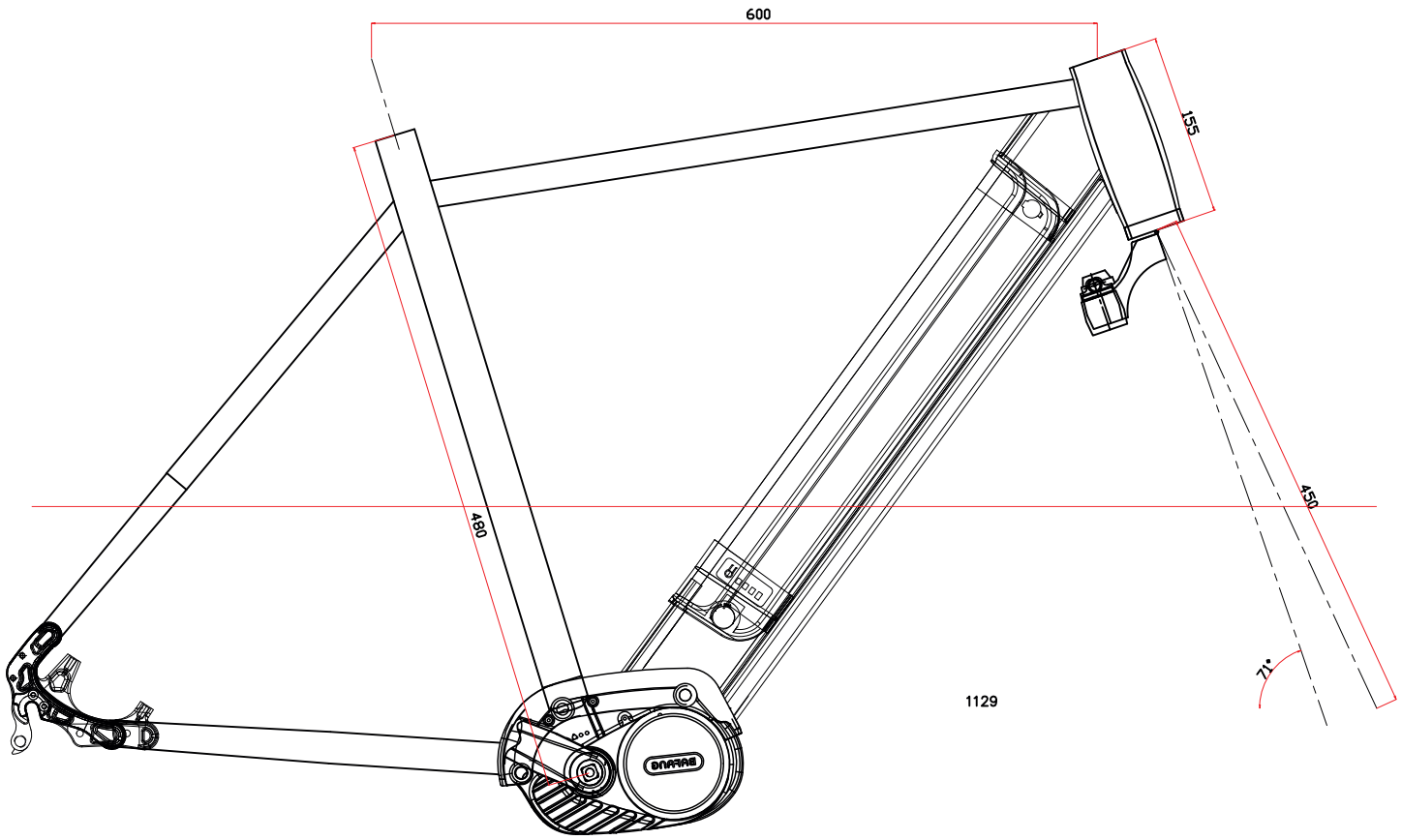
LEADER FOX